Type 8647
AirLINE SP

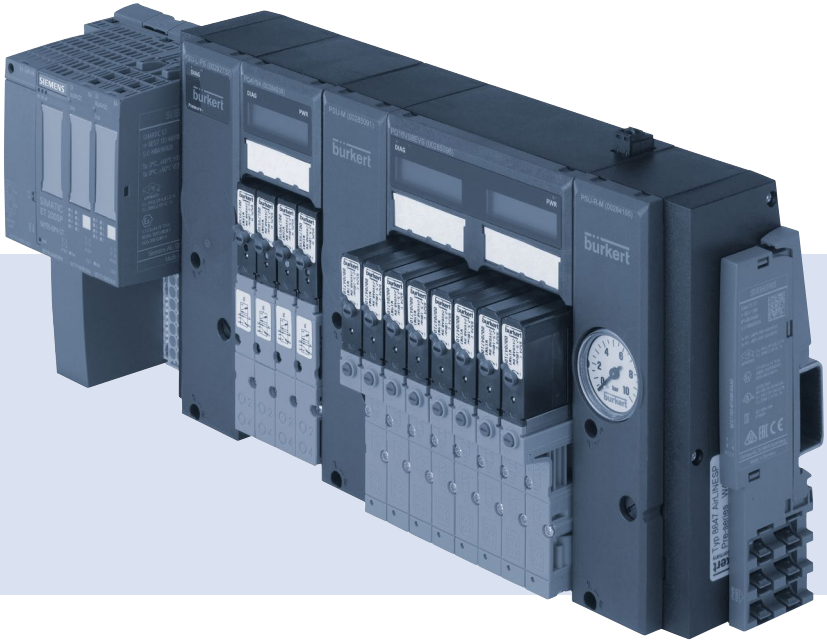

Valve block AirLINE SP
with interface to the distributed I/O system
SIMATIC ET 200SP and
SIMATIC ET 200SP HA (Siemens)

Quickstart

English

MAN 1000331351 EN Version: EStatus: RL (released | freigegeben) printed: 01.02.2023

Operating Instructions 2301/04_EU-ML_00810496 / Original DE

MAN 1000331351 EN Version: EStatus: RL (released | freigegeben) printed: 01.02.2023

1 THE QUICKSTART

The quickstart contains the most important information and notes regarding the use of the device. A detailed description can be found in the operating instructions for Type 8647.

The operating instructions can be found online at country.burkert.com

Keep the quickstart in a location which is easily accessible to every user and make it available to every new owner of the device.

The current digital Quickstartversion can be found at country.burkert.com.

Important safety information.

- Carefully read these instructions.
- Observe in particular the safety instructions, intended use, and operating conditions.
- Persons, who work on the device, must read and understand these instructions.

1.1 Definitions of terms

Term	Is used in these instructions in substitution for
Device, valve block	Valve block AirLINE SP Type 8647
Valve terminal	Valve block AirLINE SP Type 8647 in combination with modules from the distributed I/O systems Siemens SIMATIC ET 200SP/SP HA
Valve, pilot valve	Solenoid valve for pneumatics that can be integrated in the valve block
Standard rail	Standard rail (for use with SIMATIC ET 200SP) or profile rail (for use with SIMATIC ET 200SP HA)
Actuator, process valve, pneumatic cylinder, pneumatic drive, pneumatic components	Pneumatic consumer activated by the valve block
System	Machine whose pneumatic consumers are controlled by the valve block

1.2 Symbols

DANGER

Warns of an immediate danger.

- Failure to observe the warning will result in a fatal or serious injury.

WARNING

Warns of a potentially dangerous situation.

- Failure to observe the warning may result in a fatal or serious injury.

CAUTION

Warns of a possible danger.

- Failure to observe the warning may result in a moderate or minor injury.

NOTE

Warns of damage to property.

Indicates important additional information, tips and recommendations.

Refers to information in these instructions or in other documentation.

- Designates an instruction which you must follow to prevent a hazard.

→ Designates a procedure which you must carry out.

2 AUTHORIZED USE

The valve block AirLINE SP Type 8647 is intended for activating pneumatic consumers in automation systems. The valve block should only be used to activate suitable pneumatic consumers.

- Use the device for its intended purpose only. Non-intended use of the device may be dangerous to people, nearby equipment and the environment.
- In areas at risk of explosion, only use devices approved for use in those areas. These devices are identified by additional approval data on the type label. When used in potentially explosive atmospheres, always observe the details on the type label and the additional instructions for the potentially explosive atmosphere included in the scope of delivery.
- Install the device in a suitable control cabinet or in a suitable housing. The control cabinet or housing requirements correspond to those of the distributed Siemens I/O systems “SIMATIC ET 200SP” or “SIMATIC ET 200SP HA” , but at least to degree of protection IP54.
- Do not use the device outdoors.
- Correct transportation, correct storage as well as correct installation, start-up, operation and maintenance are essential for reliable and problem-free operation.
- When using the device, observe the permitted data, operating conditions and application conditions. This information can be found in the contractual documents, the operating instructions and on the type label.

- Use the device only in conjunction with third-party devices and components recommended and authorized by Bürkert.
- Do not operate the device unless it is in perfect working order.

The valve terminal is only intended for use in industrial environments.

The valve terminal is only permitted in applications where there is a danger to life and limb if the SIA and EVS functions provided for this purpose are used with appropriate, approved equipment (safety relays, etc.).

3 BASIC SAFETY INSTRUCTIONS

These safety instructions do not consider any contingencies or incidents which occur during assembly, operation and maintenance. The operator is responsible for observing the location-specific safety regulations, also with reference to the personnel.

Risk of injury due to high pressure and escape of medium as well as uncontrolled movement of the actuators.

- Before working on the device or system, secure the actuators against moving.
- Before working on the device or system, switch off the pressure. Vent or drain lines.

Risk of injury due to electric shock.

- Before working on the device or system, switch off the power supply. Secure against reactivation.
- Observe applicable accident prevention and safety regulations for electrical equipment.

Risk of burns from hot device components.

- Keep the device away from highly flammable substances and media.

Risk of injury due to improper installation and maintenance.

- Only trained technicians may perform installation and maintenance work.
- Perform installation and maintenance work with suitable tools only.

Risk of injury due to unintentional activation and uncontrolled start-up of the device and system.

- Secure the device and system to prevent unintentional activation.
- Ensure that the system does not start up in an uncontrolled manner.

Risk of injury due to allergic reactions to lubricants.

- Avoid skin contact with lubricants.
- Wear protective gloves.

General hazardous situations.

To prevent injury, ensure the following:

- Do not transport, install or remove heavy devices without the aid of a second person and using suitable auxiliary equipment.
- Install the device according to the regulations applicable in the country.
- Do not supply the medium connectors of the device with aggressive or flammable media.
- Do not supply the medium connectors of the device with liquids.
- After an interruption, ensure that the process is restarted in a controlled manner.
  Observe the sequence:
  1. Connect power supply.
  2. Charge with medium.
- Do not make any changes to the device.
- Do not subject the device to mechanical loading.
- Observe the general rules of technology.

In the event of a near-accident, inform the responsible operator.

NOTE

Electrostatic sensitive components and modules.

The device contains electronic components which react sensitively to electrostatic discharge (ESD). Contact with electrostatically charged persons or objects are hazardous to these components. In the worst case scenario, these components will be destroyed immediately or will fail after starting up.

- To minimize or eliminate the risk of damage resulting from sudden electrostatic discharges, ensure compliance with the requirements of EN 61340-5-1.
- Do not touch electronic components while the supply voltage is switched on!

4 GENERAL INFORMATION

4.1 Contact address

Germany

Bürkert Fluid Control Systems
Sales Center
Christian-Bürkert-Str. 13-17
D-74653 Ingelfingen
Tel. + 49 (0) 7940 - 10-91 111
Fax + 49 (0) 7940 - 10-91 448
Email: info@burkert.com

International

Contact addresses can be found on the final pages of the printed quickstart guide. And also online at: country.burkert.com

4.2 Warranty

The warranty is only valid if the device is used as intended in accordance with the specified application conditions.

4.3 Information on the Internet

The operating instructions and data sheets for valve block AirLINE SP Type 8647 can be found online at country.burkert.com

Information on the distributed Siemens I/O systems can be found online.

SIMATIC ET 200SP

System manual:
https://support.industry.siemens.com/cs/ww/en/view/58649293
Manual collection:
https://support.industry.siemens.com/cs/ww/en/view/84133942

SIMATIC ET 200SP HA

System manual:
https://support.industry.siemens.com/cs/ww/en/view/109761547
Manuals:
https://support.industry.siemens.com/cs/ww/en/ps/24728/man

Bürkert has no influence on the reliability of the linked web pages.

4.4 Conformity

The device conforms to the EC directives as per the EC Declaration of Conformity (if applicable).

Under certain circumstances, SIMATIC ET 200SP / SP HA comes with approvals that are not available for the valve block.

- Check and ensure the necessary approvals for all components of the valve terminal before using the device.

4.5 Standards

The applied standards, which are used to demonstrate compliance with the EC Directives, are listed in the EC Prototype Examination Certificate and/or the EC Declaration of Conformity (if applicable).

5 SYSTEM OVERVIEW

Combining modules from the distributed Siemens I/O systems SIMATIC ET 200SP / SP HA with the valve block AirLINE SP Type 8647 provides an integrated system of electronic and pneumatic components. Depending on the requirement, electrical and pneumatic modules with various functions can be combined with each other by the observation of simple rules.

The option of combining the valve block with both SIMATIC ET 200SP and SIMATIC ET 200SP HA allows you to select the system properties required for the respective application (compactness, redundancy functions, etc.).

5.1 Valve block AirLINE SP Type 8647

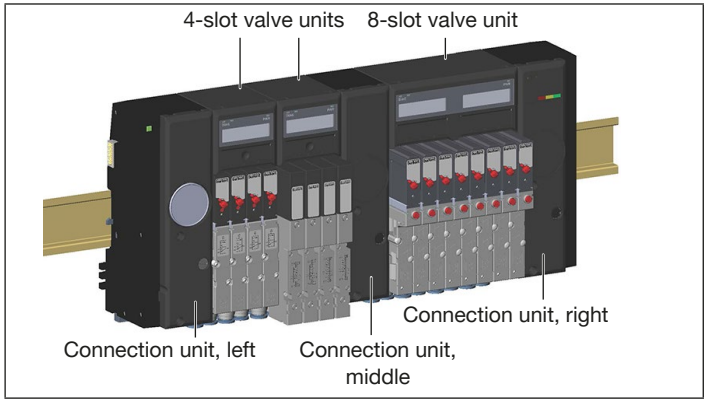

Fig. 1: Übersicht Ventilblock AirLINE SP Typ 8647

Valve block AirLINE SP Type 8647 is a modular, electro-pneumatic system consisting of connection and valve units. It is intended for complete integration into the distributed Siemens I/O systems “SIMATIC ET 200SP” and “SIMATIC ET 200SP HA”.

The valve block is used to incorporate pneumatic pilot valves directly in SIMATIC ET 200SP/SP HA and to activate them via SIMATIC ET 200SP/SP HA. Pneumatic cylinders, pneumatically actuated process valves or similar suitable pneumatic components can be connected at the pneumatic outputs.

Parameterization and configuration take place using the same tools as for SIMATIC ET 200SP/SP HA, e.g. SIMATIC “STEP 7”, “TIA Portal” or “PCS7”. Integration in various PROFIBUS systems or PROFINET systems occurs via GSD/GSDML. When configuration tools from Siemens are used, integration via HSP or HUP is alternatively possible. As a result, further functions and more comfortable operation are possible.

5.1.1 Information on compatibility and revision status

The single valves of types 6524 and 6525, the pneumatic base modules and connection modules as well as the control cabinet base adaptation AirLINE Quick have been revised due to various optimisations. Compatibility must therefore be considered in the following cases:

- Valve replacement (see chapter“12.1 Replace valve”)
- Extension, repair, or renovation of valve blocks (see operating instructions Type 8647 at country.burkert.com)

The new revision (REV.2) only affects pneumatic components of the valve block 8647. Not affected by the revision:

– Electrical data
– Configuration
– External dimensions

REV.1 Production date from **05/2017**	**REV.2** Production date from **04/2022**
Pneumatic base modules REV.1	Pneumatic base modules REV.2
Connection modules REV.1	Connection modules REV.2
Solenoid valves of types 6524 and 6525: 1 Flange image for double valves 1 Flange image for single valves	Solenoid valves of types 6524 and 6525: 1 Flange image for double and single valves
AirLINE Quick REV.1	AirLINE Quick REV.2*

*) There is no difference between AirLINE Quick REV.1 and REV.2 in terms of assembly and installation.

5.1.2 Distinguishing features between REV.1 and REV.2

Feature	REV.1	REV.2
Colour of the release rings (push-in connectors)	black	blue
Channel arrangement of the working connections	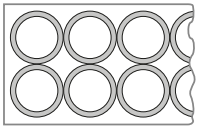 parallel	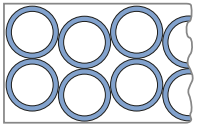 wavy
Indication on type label	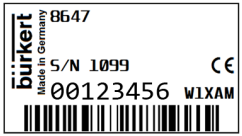 without “Rev.” specification	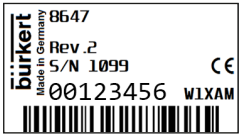 with “Rev.2” specification

5.2 Connection units

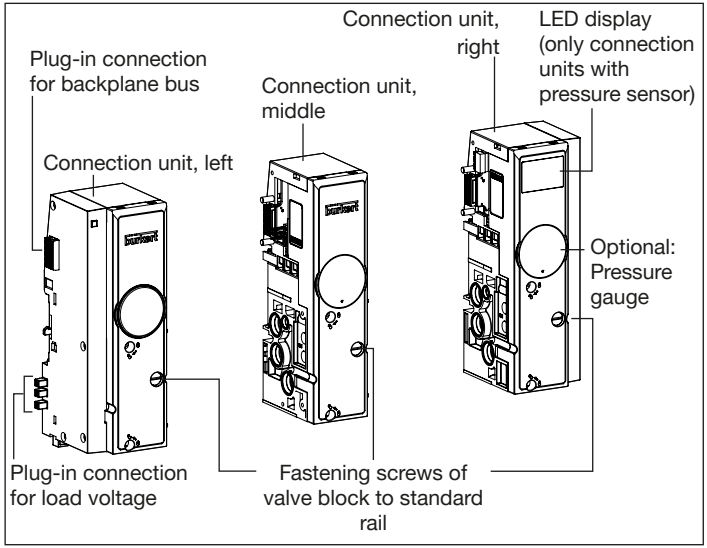

Fig. 2: Overview of connection units (displayed: REV.2 – only detailed differences to REV.1)

The pneumatic supply and deaeration of the valve block occurs via connection units. Furthermore, the valve block is fixed to the standard rail via the connection units.

5.3 Valve units

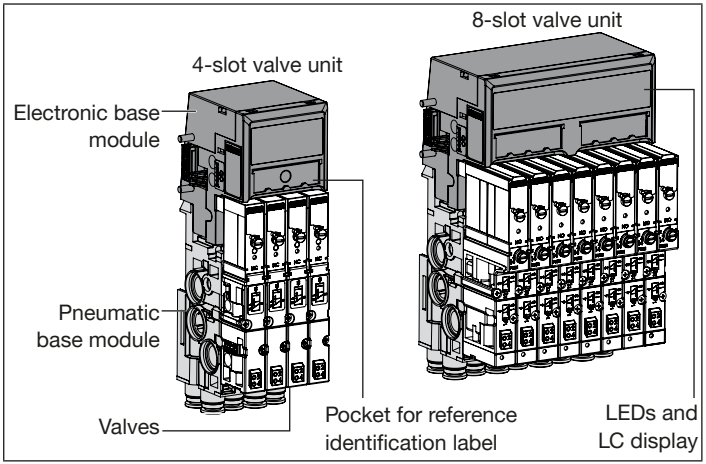

Fig. 3: Overview of valve units (displayed: REV.2 – only detailed differences to REV.1)

Valve units convert the electrical control signals of the interface module into pneumatic output signals and provide the pneumatic outputs.

The electronic base module is part of the valve unit. It contains the electrical plug-in connections for the valves, the valve driving electronics, and the visual status indicators (LEDs for displaying the device status and a graphics LCD).

Safety shutdown per module

Optionally, electronic base modules (EVS variants) can be connected with an external, potential-free switching contact. As a result, the safety shutdown of all valves of this base module is possible (e.g. for “Central system off”).

Overview of electronic base modules

Designation	ID number	Number of valve slots	Overall width [mm]	Valve type*	EVS**
PQ4VS4	284935	4	44	I	
PQ4VS4EVS	285097			I	X
PQ8VS4	284936			II	
PQ8VS4EVS	285098			II	X
PQ8VS4EVS-5/3V	331588			III	X
PQ8VS8	283166	8	88	I	
PQ8VS8EVS	285095			I	X
PQ16VS8	284806			II	
PQ16VS8EVS	285096			II	X

Tab. 1: Overview of electronic base modules

*) I = single valve (Type 6524 / 6525);
II = double valve (2x3/2-way valve Type 6524 and pulse valve Type 0460)
III = 5/3-way valve (Type 0460)

**) External Valve Shutdown

5.4 Solenoid valves that can be integrated for pneumatics

Type	Function
6524	3/2-way valve or 2x3/2-way valve
6525	5/2-way valve
0460	5/2-way pulse valve and 5/3-way valve
0498	Pilot-operated double check valve (see chapter “5.4.1”, page 13)

NOTE

Damage to the manual override.

To avoid damage to the manual override, observe the following:

Manual override “A”:
- Press (push function) or turn (lock function).

Manual override “B”:
- Turn only (lock function).

Manual override “C”:
- Press (push function), turn while pressed (lock function).

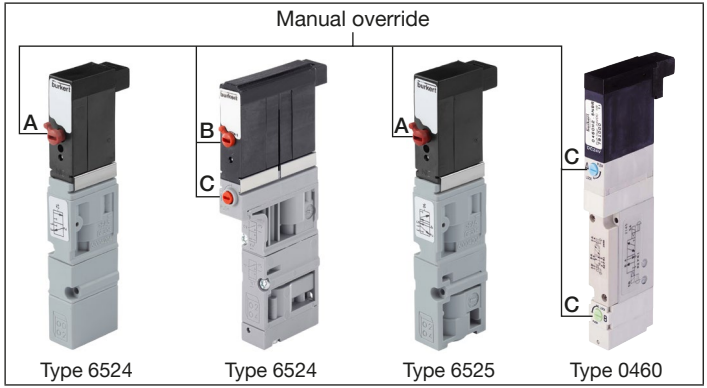

Fig. 4: Solenoid valves that can be integrated in the valve block

Safety shutdown per channel

Optionally, type 6524 and 6525 valves can be equipped with a second connection (pressed on cable). As a result, safety shutdown per channel is possible. These valve variants are not equipped with manual override. Also see ““EVS” connection”, page 24.

5.4.1 Pilot-operated double check valve: Type 0498

The pilot-operated double check valve, Type 0498, can be used to run a 5/3-way function.

It is available as an accessory and is not a component of the valve block. It is controlled by 2x 3/2-way valves of the valve block.

Compared to the use of a 5/3-way solenoid valve (Type 0460), Type 0498 offers the following advantages:

- Can be used individually for individual channels (Type 0460 only in blocks of 4)
- Suitable for use in potentially explosive atmospheres in conjunction with corresponding AirLINE SP Type 8647 device variants

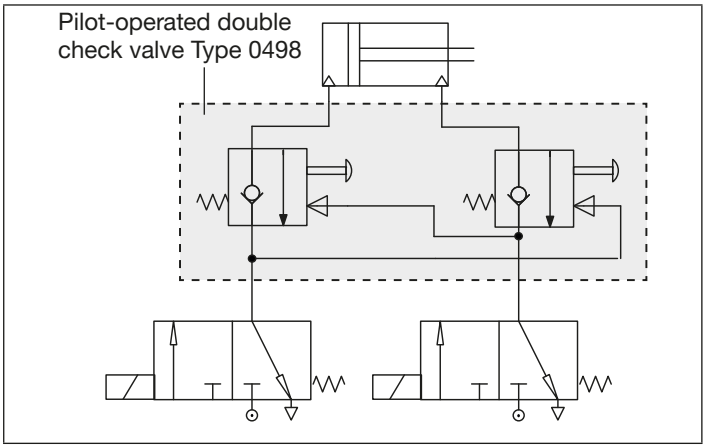

Fig. 5: Running a 5/3-way function with valve, Type 0498, and 2x 3/2-way valves of the valve block

Further information and data sheets on the pilot-operated double check valve, Type 0498, can be found on the Internet under country.burkert.com.

6 APPLICATION PLANNING

Valve block AirLINE SP Type 8647 is intended for use in automation systems within buildings. It must be installed in a suitable control cabinet or in a suitable housing. In this case, suitable means with a degree of protection of at least IP54 in accordance with EN 60529. The environmental conditions for operating the devices must be taken into account (see also the SIMATIC ET 200SP or SIMATIC ET 200SP HA system manual).

SIMATIC ET 200SP

System manual:
https://support.industry.siemens.com/cs/ww/en/view/58649293
Manual collection:
https://support.industry.siemens.com/cs/ww/en/view/84133942

SIMATIC ET 200SP HA

System manual:
https://support.industry.siemens.com/cs/ww/en/view/109761547

Manuals:
https://support.industry.siemens.com/cs/ww/en/ps/24728/man

For use in areas at risk of explosion, note the information provided in chapter “2 Authorized use”, page 5.

6.1 AirLINE SP Type 8647 in combination with SIMATIC ET 200SP HA

The valve block is integrated into the I/O system via the SIMATIC ET 200SP HA profile rail.

A SIMATIC ET 200SP BaseUnit is required directly to the left of the valve block (for the load voltage supply).

Please refer to the documentation of SIMATIC ET 200SP HA for information on how this BaseUnit may be equipped (cover/for I/O modules of SIMATIC ET 200SP released for SIMATIC ET 200SP HA). If a cover module is used, HSP0293 from Siemens is required for its configuration (supplied as standard with PCS7 from version 9.1).

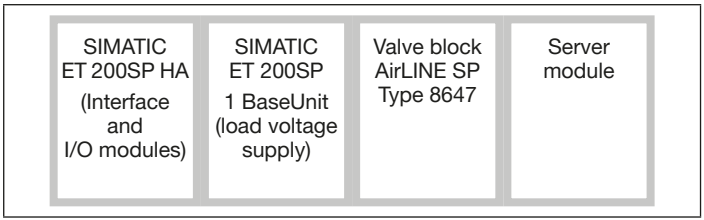

Fig. 6: Schematic station layout SIMATIC ET 200SP HA with AirLINE SP Type 8647

Refer to section “6.3.3”, page 16 for more information on the layout.

The “*Configuration in Run*” function may be limited in some circumstances.

6.2 Application conditions

Application conditions, e.g. the ambient temperature range, permissible installation position or applicable certifications, depend on the applied modules of SIMATIC ET 200SP/SP HA (also see the system manual SIMATIC ET 200SP/SP HA).

Consider the following when planning the power supply:
Based on the properties of the applied valves, the permissible tolerance of the load voltage is +/–10%. This value differs from the system properties of SIMATIC ET 200SP/SP HA and from the specifications of IEC 61131-2.

Recommendation (required in combination with SIMATIC ET 200SP HA!):

→ Install a light-colored BaseUnit (type code BU…D or BU…D/T) immediately in front of the valve block. As a result, the valve block receives a separate load voltage supply.

6.3 Maximum system extension

6.3.1 Valve block

Valve slots	Maximum of 64 (less when used with Type 0460 valves, 2x 3/2-way valve or the “AirLINE Quick” control cabinet base adaptation)
Connection units, middle	0...10 (depends on the number of valve slots and valve functions as well as the requirements of the application)
Valve functions	Maximum of 64
Width	Maximum 858 mm

6.3.2 Valve block in combination with SIMATIC ET 200SP

Number of modules	64 I/O modules / connection units / electronic basic modules in complete valve island (Siemens SIMATIC ET 200SP + AirLINE SP Type 8647 valve blocks)
Valve blocks	Several possible in one station as long as the permissible width is adhered to.
Position on station	Valve blocks can be positioned as required. Further SIMATIC ET 200SP I/O modules can be mounted to the right of a valve block.
AirLINE Quick	It is possible to use the “AirLINE Quick” control cabinet base adaptation, but restrictions must be observed with regard to the applied BaseUnits and the number of SIMATIC ET 200SP modules (for details see section “7.3”).
Width	Maximum 975 mm* (incl. all Siemens modules, but without interface module)
Further restrictions may result from the installation position, the applied interface module and performance considerations (see also the SIMATIC ET 200SP system manual).	

*) Depending on the design of the valve block(s), 25 mm must be deducted from the specification of ET 200SP (1000 mm permissible).

6.3.3 Valve block in combination with SIMATIC ET 200SP HA

Number of modules	56 I/O modules / connection units / electronic basic modules in complete valve island (Siemens SIMATIC ET 200SP HA + valve block AirLINE SP Type 8647)
Valve blocks	Only one valve block per station possible.
Position on station	The valve block can only be mounted to the right of a SIMATIC ET 200SP HA station. Further SIMATIC ET 200SP I/O modules cannot be mounted to the right of the valve block.
AirLINE Quick	It is not possible to use the “AirLINE Quick” control cabinet base adaptation in combination with SIMATIC ET 200SP HA.
Width	Maximum 1240 mm* (incl. all Siemens modules, but without interface module(s))
Further restrictions may result from the installation position, the applied interface module and performance considerations (see also the SIMATIC ET 200SP HA system manual).	

*) Depending on the design of the valve block, 20 mm must be deducted from the specification of ET 200SP HA (1260 mm permissible).

7 INSTALLATION

WARNING

Risk of injury from improper assembly.

- Only trained technicians may perform assembly and disassembly work.
- Perform installation work with suitable tools only.

CAUTION

Risk of injury as a result of a heavy device falling.

A heavy device can fall down and cause injury during transport or assembly work.

- Do not transport, install or remove heavy devices without the aid of a second person and using suitable auxiliary equipment.

The valve block is not connected securely to the standard rail before the fastening screws are tightened.

- Make sure the valve block cannot fall down during the entire installation process.

Risk of injury due to sharp edges.

- Note that some valve terminal components may have sharp edges.

Valve block AirLINE SP Type 8647 is supplied as a fully assembled device. Any modifications should only be carried out by Bürkert.

The valves are an exception to this rule and may be replaced with identical valves by the user.

7.1 Removing the transportation safety device from the valve block

The valve block is mounted on a standard rail for safe transportation. It must be removed from this standard rail for installation in the control cabinet.

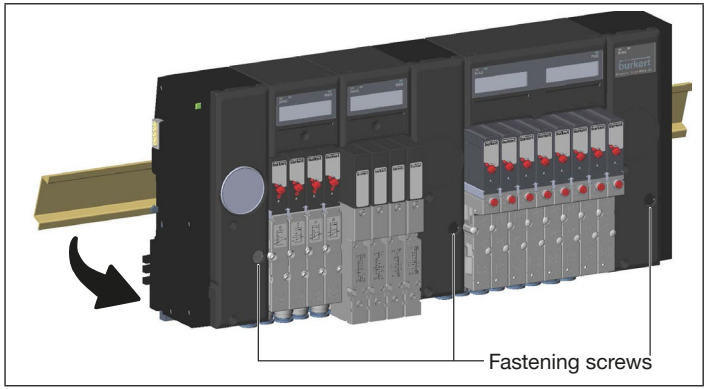

Fig. 7: Releasing the valve block from the standard rail

→ Turn the fastening screws all the way counter-clockwise.

→ Tilt the valve block upward slightly and remove it from the standard rail.

7.2 Installing the valve block on the standard rail in the control cabinet

NOTE

- Observe the specifications in the configuration file for the installation sequence.
- Ground the standard rail with low impedance to guarantee the best possible EMC protection.
- Before installation in the control cabinet, check that the standard rail is anchored firmly in the control cabinet.

The valve block must be freely accessible from above. When installing the standard rail in the control cabinet, note that the valve block requires a **minimum clearance of 5 cm to the upper edge of the control cabinet** (“Fig. 8”).

The minimum clearance is necessary for

– Assembly and disassembly of the device on the standard rail

– Avoidance of heat build-up through the device waste heat.

If the device contains electronic base modules **with EVS function**, a **minimum clearance of 8 cm to the upper edge of the control cabinet** is recommendable. This makes the EVS connection more accessible.

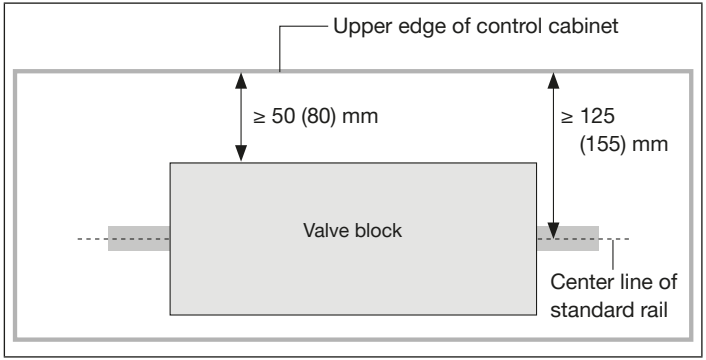

Fig. 8: Installing the valve block on the standard rail in the control cabinet: Minimum clearance of the valve block to the upper edge of the control cabinet ≥ 5 cm (with EVS function ≥ 8 cm)

CAUTION

Risk of injury as a result of a heavy device falling.

The valve block is not connected securely to the standard rail before the fastening screws are tightened.

- Make sure the valve block cannot fall down during the entire installation process.

→ Make sure all the fastening screws of the valve block (see “Fig. 7”) are turned all the way counter-clockwise.

→ Place the valve block slightly tilted upwards on the standard rail in the desired position and swing it onto the standard rail. **Hold the valve block if not installed horizontally!**

→ Tighten the fastening screws clockwise (tightening torque approx. 1.8 Nm).

→ Attach the BaseUnits of SIMATIC ET 200SP / SP HA to the standard rail on the left of the valve block according to the instructions provided by the manufacturer. Push the BaseUnits to the valve block until the catch hook audibly engages. To ensure the plug-in connections are connected properly, make sure the BaseUnits are firmly on the valve block along the entire length.

→ Preferably install a light-colored BaseUnit (type code BU…D or BU…D/T) immediately to the left of the valve block (required in combination with SIMATIC ET 200SP HA).

→ To the right of the valve block, install either the server module or further BaseUnits of SIMATIC ET 200SP (only permissible with SIMATIC ET 200SP stations, not with SIMATIC ET 200SP HA stations). If further BaseUnits are to be installed, the first BaseUnit after the valve block must be a light-colored BaseUnit (BU...D or BU...D/T) to supply the necessary load voltage.

7.3 Installing the valve block on the base of the control cabinet (with AirLINE Quick)

When using the control cabinet base adaption “AirLINE Quick”, the device is mounted to the control cabinet base via a solid metal plate. In this case, the device supports the standard rail (incl. the modules of SIMATIC ET 200SP mounted thereon) rather than the other way round.

NOTE

- Observe the specifications in the configuration file for the installation sequence.
- Ground the standard rail with low impedance to guarantee the best possible EMC protection.

When configuring the modules of SIMATIC ET 200SP, observe that the permissible projection of the standard rail is limited to 10 cm on both sides of the valve block.

Only short BaseUnits can be used.

Combination of AirLINE Quick with SIMATIC ET 200SP HA is not possible due to the design.

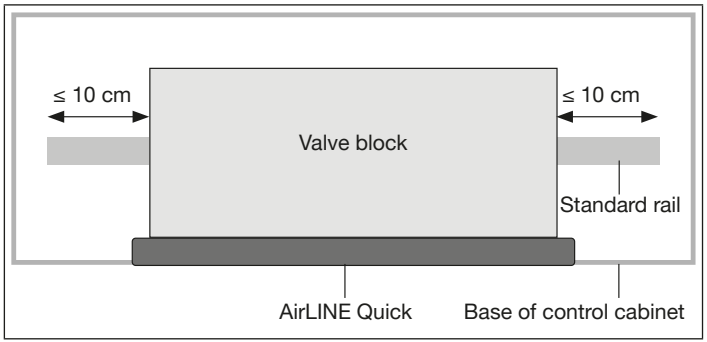

Fig. 9: Installation position in the control cabinet when using AirLINE Quick

7.3.1 Installation of AirLINE Quick

There is no difference between AirLINE Quick REV.1 and REV.2 in terms of assembly and installation.

To install AirLINE Quick, a cut-out must be provided on the base of the control cabinet. The cut-out can be created, e.g., through laser-cutting or punching.

Assignment of the pneumatic connections and the dimensions of the flange images can be found online at: country.burkert.com

NOTE

- The cut-out on the control cabinet must be burr-free for the seal not to become damaged between AirLINE Quick and the control cabinet.

→ Insert the seal between AirLINE Quick and the control cabinet free from damage into the groove of the AirLINE Quick metal plate.

→ Place the valve block in the control cabinet on the prepared cut-out.

→ Attach the stability plate from the outside and fix with M5x10 screws.

7.4 Disassembling from the standard rail in the control cabinet

DANGER

Risk of injury when the device is connected electrically and pneumatically.

If the device has been connected electrically and pneumatically, carry out the following before disassembling:

- Secure the actuators against moving.
- Switch off pressure. Vent or drain lines.
- Switch off the power supply. Secure against reactivation.

CAUTION

Risk of injury as a result of a heavy device falling.

The valve block is not connected securely to the standard rail after loosening the fastening screws.

- Make sure the valve block cannot fall down during the entire deinstallation process.

→ Disassemble the server module installed to the right of the valve block and any SIMATIC ET 200SP BaseUnits according to the manufacturer's instructions.

→ Turn the fastening screws of the valve block (see "Fig. 7") carefully all the way counter-clockwise. **Hold the valve block! The valve block is not connected securely to the standard rail after loosening the fastening screws.**

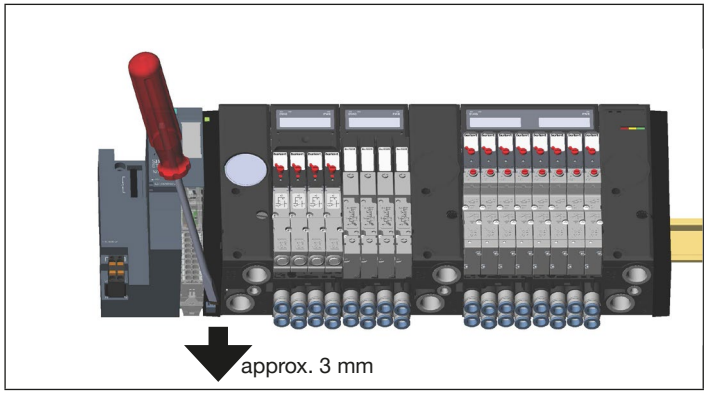

Fig. 10: Disassembling the valve block from the standard rail in the control cabinet

→ Insert a flat-blade screwdriver (approx. 3 mm blade width) into the slide of the left-hand connection unit of the valve block. Now tilt and slightly extract the slide (approx. 3 mm).

→ Slide the valve block to the right away from the left-hand mounted modules of SIMATIC ET 200SP / SP HA along the standard rail.

→ Make sure the BaseUnit has been fully released from the connection unit. The interface between the connection unit and the BaseUnit contains elements which may be damaged if force is used!

→ Tilt the valve block upward and remove it from the standard rail.

8 CONNECTING

DANGER

Risk of injury from high pressure.

Suddenly escaping pressure medium can quickly accelerate device components (hoses, small parts, ...) resulting in injuries and/or damage.

- Before working on the device or system, switch off the pressure. Vent or drain lines.

Actuators may change their position when the pressure changes.

- Before working on the device or system, secure the actuators against moving.

WARNING

Risk of injury due to electric shock.

- Before working on the device or system, switch off the power supply. Secure against reactivation.
- Observe applicable accident prevention and safety regulations for electrical equipment.

Risk of injury from improper installation.

- Only trained technicians may perform installations.
- Perform installations with suitable tools only.

Risk of injury due to unintentional activation and uncontrolled start-up of the system.

- Secure system against unintentional activation.
- Ensure that the system does not start up in an uncontrolled manner.

CAUTION

Risk of injury due to discharge of medium and malfunctioning.

Medium may escape if the seals are not seated correctly. The function of the device may be restricted by pressure losses.

- Ensure that all the seals are seated correctly.

Risk of injury from damaged contacts.

Damaged contacts may result in a short circuit and malfunctioning.

- Do not bend contacts.
- If contacts are damaged or bent, replace the affected components.
- Do not switch on the device unless the components are in perfect condition.

NOTE

- Operate the device with direct current only!
- Prevent a pressure drop. Design the pressure supply with the largest possible volume.

8.1 Pneumatic Installation

DANGER

Risk of injury from high pressure.

- Before loosening lines and valves, turn off the pressure and vent the lines.
- Close the open connections not required with suitable plug elements.
- Connections for the pilot control exhaust air (x) must not be sealed.
- Check correct assignment of the connections 1 and 3/5. They may by no means be interchanged.

CAUTION

Uncontrolled reaction of the system due to back pressures.

Insufficient exhaust air ventilation can lead to unintended switching of the valves due to back pressures.

- Ensure that exhaust air is vented properly (e.g. via a large cable cross-section).
- Avoid pressure build-up in the exhaust air ducts. To do this, use all exhaust air ports and pilot exhaust air ports of the valve block and regularly check the exhaust air silencers and replace them if required.
- Design the pressure supply with the largest possible volume to prevent unwanted reaction of the system when switching the valves.

8.1.1 Pneumatic installation of the connection units

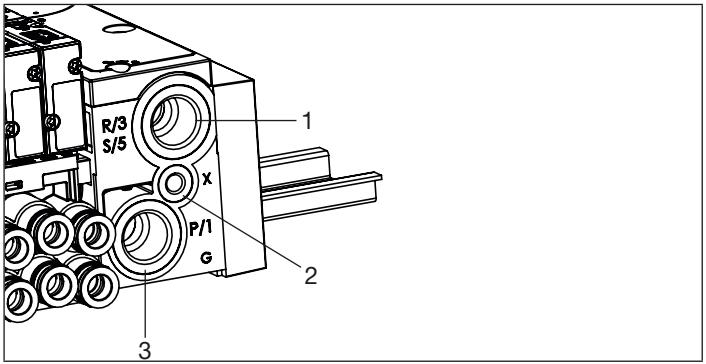

Fig. 11: Pneumatic installation of connection units

Pos.	Identification	Function	Connection type
1	R/3 S/5	Exhaust air	G1/4“
2	X	Activation EXT: auxiliary control air INT: pilot control exhaust air	M5
3	P/1	Pressure supply	G1/4“

8.1.2 Pneumatic installation of the valve units

NOTE

For 3/2-way valves, the upper connections remain free.

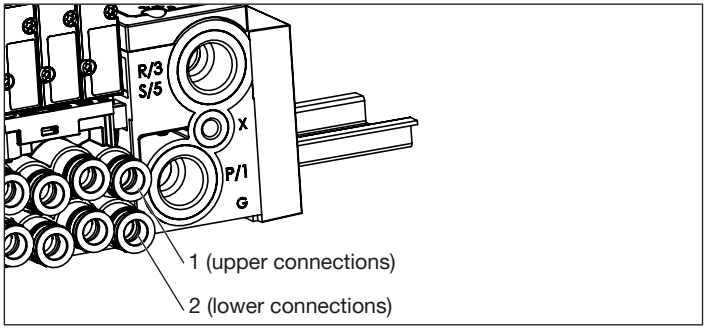

Fig. 12: Pneumatic installation of valve units

Pos.	3/2-way valve Type 6524	2x3/2-way valve Type 6524	5/2-way valve Type 6525	Valve Type 0460
1 (upper connections)	Not used	2	2	2
2 (lower connections)	2	4	4	4

Tab. 2: Configuration of the working connections of the valve units

Configuration of the connections is displayed on the housing for Type 6524 and Type 6525 valves.

Information about assignment of the valves can be written to the reference identification labels of the electronic base modules.

8.2 Electrical installation

WARNING

Risk of injury due to electric shock.

- Before working on the device or system, switch off the power supply. Secure against reactivation.
- Observe applicable accident prevention and safety regulations for electrical equipment.

The electrical connections of the valve block (load voltage, backplane bus, grounding) are established automatically when latched to the BaseUnits of SIMATIC ET 200SP. An exception are the EVS connections of the electronic base modules with “EVS” (see “8.2.1 “EVS” connection”).

The power supply of the valve block occurs via the power bus of the BaseUnits. The valve block only utilizes the “L+” and “M” connections; the “AUX” connection is not used.

Preferably install a light-colored BaseUnit (type code BU…D or BU…D/T) immediately to the left of the valve block (required in combination with SIMATIC ET 200SP HA!). It can be used to split the supply for the valve block. This additionally facilitates adherence to allowable voltage tolerances and permissible maximum currents.

If further BaseUnits of SIMATIC ET 200SP are to be installed to the right of the valve block (not permissible in combination with SIMATIC ET 200SP HA!), the first BaseUnit must be a light-colored BaseUnit (type code BU...D or BU...D/T) to supply the necessary load voltage.

The required steps for electrical connection can be found in the Siemens system manual “Distributed I/O system ET 200SP” or “Distributed I/O system ET 200SP HA”.

8.2.1 “EVS” connection

DANGER

Risk of injury due to unintentional movement.

If the EVS function is required to control safety-critical procedures, a faulty EVS function can cause hazardous movements of the actuators.

- Ensure that the EVS function is functioning correctly before start-up.

In spite of an activated EVS function, actuators can be moved through manual overrides of the valves. If the EVS function is used to control safety-critical procedures:

- Take suitable measures to prevent unintentional activation of the valves (e.g. lockable control cabinet or use valve variants without manual override).

WARNING

Risk of injury and material damage due to electrical faults.

If the EVS connections are not connected properly, there is a risk of injury due to the uncontrolled reaction of the system.

- When using several modules with “EVS”, connect each EVS connection with a separate potential-free contact. **Never interconnect several contacts!**
- Do not supply voltage to the EVS contacts (risk of damaging the modules).

Risk of injury due to sharp edges.

Sharp edges on the EVS connection or on the contacts of the plug-in screw-type terminal may result in cut injuries.

- Wear suitable protective gloves.

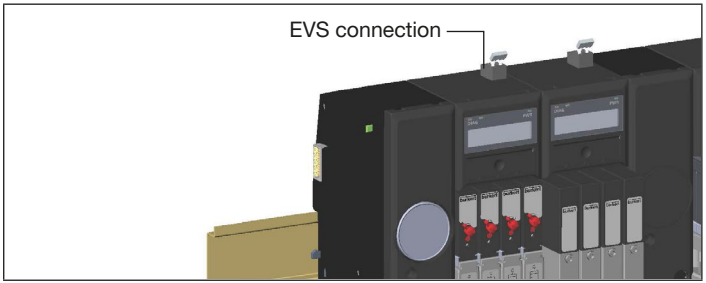

Fig. 13: EVS connection

The abbreviation EVS stands for “External Valve Shutdown”.

Electronic base modules with “EVS” have an additional two-pole connection on the top. This connection can be used to interrupt the power supply of the valves to this module, e.g. to implement functions such as “Central system off” or deactivate actuators group by group.

An interruption on the EVS connection will immediately cause a single-pole interruption of the common supply to all valves of the module (see “Fig. 14”).

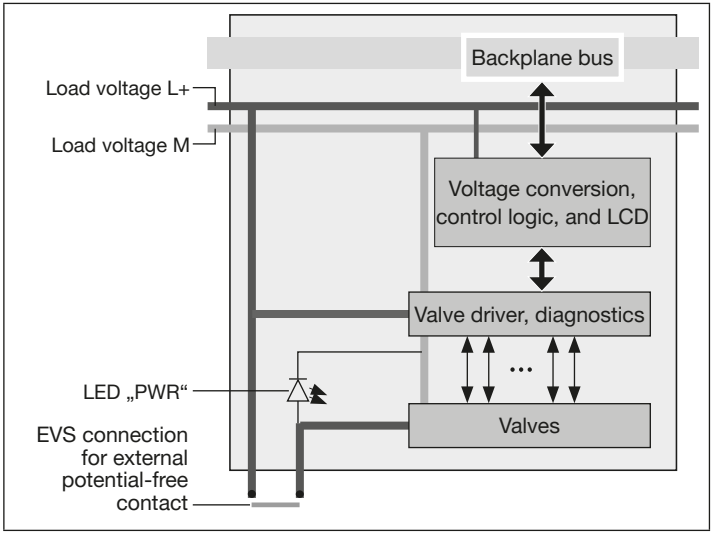

Fig. 14: Schematic representation of a valve unit with EVS (External Valve Shutdown)

For use, the EVS connection must be connected to a potential-free contact (mechanical switch or relay), e.g. via a relay module RQ... or F-RQ … of SIMATIC ET 200SP / SP HA.

The contact must be in the same control cabinet as the valve block; restrict the maximum cable length to 2 m.

Connection	Pluggable screw-type terminal*, 2-pole cable cross-section (rigid or flexible) 0.14 mm²...1.5 mm² (AWG 28...16)
Required switching capacity of the contact	1.5 A / 24 V ⎓

*) Upon delivery, the screw-type terminal is fitted with a bridge that enables immediate operation of the electronic base module. Remove the bridge before connecting a cable.

8.2.2 Diagnostics and reaction of electronic base modules with EVS

If the valves are switched via EVS, the logic and display of the electronic base module continue to run.
“EVS active” is shown on the display, the diagnostics “No valve voltage / EVS active” (if activated) occurs via the backplane bus.

If there is no load voltage, the electronic base modules with EVS react the same as those without EVS. The display is off and the diagnostics “No supply voltage L+” (if activated) occurs.

If diagnostics messages for short circuit and wire break occurred prior to shutdown via EVS, the messages remain. If a short circuit or wire break occurred after shutdown via EVS, no diagnostics will be generated.

9 CONFIGURATION

The valve block can be used with all the interface modules of SIMATIC ET 200SP and SIMATIC ET 200SP HA , except for the interface module “IM 155-6 PN HS”. There may be restrictions when using older versions.

Some interface modules (e.g. “Basic” models) may have restrictions, e.g. with regard to the number of maximum usable modules or the number of maximum available data bytes (for details see product documentation of the interface modules).

The following interface modules can only be configured from the firmware version stated below:

Interface module	Firmware version	
IM 155-6 PN ST (6ES7 155-6AU00-0BN0)	3.0 or higher	If necessary, execute firmware update according to the manufacturer’s instructions
IM 155-6 PN HF (6ES7 155-6AU00-0CN0)	2.2 or higher	
IM 155-6 PN HA (6DL1155-6AU00-0PM0)	1.1 or higher	
IM 155-6 DP HF (6ES7 155-6BU00-0CN0)	3.1 or higher	“PQ8VS4EVS-5/3V” modules with GSD are not adaptable
IM 155-6 DP HF (6ES7 155-6BU01-0CN0)	4.2 or higher	
IM155-6MF HF (6ES7155-6MU00-0CN0)	5.0.3 or higher	Configuration only via GSDML*

*) *For details see Siemens documentation*

The procedure for configuration is described in the operating instructions for type 8647 (see country.burkert.com).

10 START-UPS

WARNING

Risk of injury from improper operation.

Improper operation may result in injuries as well as damage to the device and its environment.

- Before start-up, ensure that the operating personnel are familiar with and completely understand the contents of the operating instructions.
- Observe safety instructions and information on intended use.
- Only adequately trained technicians may start up the device.

Risk of injury due to an incorrectly functioning system.

Before start-up, carry out tests to ensure correct functioning of the system. This helps to avoid personal injury and damage to the system during operation.

- Before final system start-up, carry out a full function test and the required safety tests.
- Plan foreseeable possible faults in the tests.

Configuration must be fully completed to start up the equipment.

10.1 Electrical start-up

CAUTION

Undefined reaction of the valves.

The reaction of the valves is undefined if the supply voltage is too low. This may result in unintentional processes in the system.

- Ensure that the level of supply voltage is above the low tolerance limit (see “14.4 Electrical data”).

Risk of injury due to hot surfaces.

A longer duty cycle may result in the valves becoming hot.

- Let the valves cool down before removing them or wear heat-resistant protective gloves.

When using UL-certified device versions with 2x3/2-way valves, Type 6524:

- If switching occurs frequently, leave at least 100 ms pause before switching on again.

Feedback about sufficient supply voltage is displayed at the valve block via the PWR LEDs (connection units PSU-L… and all PQ modules).
If diagnostics has been activated, a diagnostics message occurs via SIMATIC ET 200SP / SP HA.

Procedures before electrical start-up:

→ Check the connections.

→ Check supply voltage.

→ Set manual overrides of the valves in neutral position.

Electrical start-up of the valve island corresponds to start-up of the Siemens distributed I/O system SIMATIC ET 200SP / SP HA.

The steps necessary for electrical start-up can be found in the Siemens system manual “Distributed I/O system ET 200SP” or “Distributed I/O system ET 200SP HA”.

Modules with EVS

If the functions “Switched off load voltage” and “PROFlenergy” are active, it is not possible to, among other things, activate the valve positions programmed by the user.

If the outputs (valves) have been switched off via EVS, it is displayed in the LC display. Additionally, the output data sent by the control are also displayed (regular alternating of “EVS active” and “Output data”).

10.2 Pneumatic start-up

CAUTION

Hazard posed by noise.

Increased noise can be generated when switching pressurized valves.

- Discharge exhaust air via a hose.
- Connect a silencer to the exhaust air connection.
- Wear ear defenders.

Procedures before pneumatic start-up

→ Check connections, voltage, and operating pressure.

→ Check correct assignment of the connections 1 and 3 / 5. They may by no means be interchanged.

→ Set manual overrides of the valves in neutral position for electrical operation.

Pneumatic start-up

→ Do not exceed maximum operating data values (see type label).

→ Switch on the supply pressure first.

→ Then switch on the voltage supply.

11 OPERATION

WARNING

Risk of injury from improper use.

Improper operation may result in injuries as well as damage to the system and its environment.

- The operating personnel must know and have understood the contents of the operating instructions fully.
- Observe safety instructions and information on intended use.
- Only adequately trained personnel may operate the system.

The valve block is controlled via the SIMATIC ET 200SP / SP HA interface module.

Device statuses are displayed via LEDs and the LC displays of the valve units. For details, see chapter “11.3” and “11.4”.

11.1 Manual activation of the valves

WARNING

Risk of injury due to actuators.

Unintentional system movements or states may result from manual activation of the valves.

- Ensure that the movements of connected actuators cannot cause injuries, damage or unwanted actions in the system.

CAUTION

Risk of injury due to hot device components.

A longer duty cycle may result in the valves becoming hot.

- Only active manual override with a screwdriver.

Depending on the type of valve, valves can be activated manually, e.g. for start-up or service tasks.

The valves can be manually activated even when the valve block is not electrically powered.

→ Press (for key function) and rotate (for lock function) manual override. Depending on the type of valve, it results in electrical activation of the valve being canceled or limited.

→ Set manual overrides in neutral position after completing the tasks.

11.2 LED display connection units

The left-hand connection units feature the LED display “PWR OK” for visual display of the operating state.

If the connection units are equipped with a pressure sensor (“PSU-..-PS”), they feature further LED displays:

- “DIAG” LED (red/green) for module status
- “Pressure” LED (red/yellow/green) for pressure status (depends on the parameterized limit values)

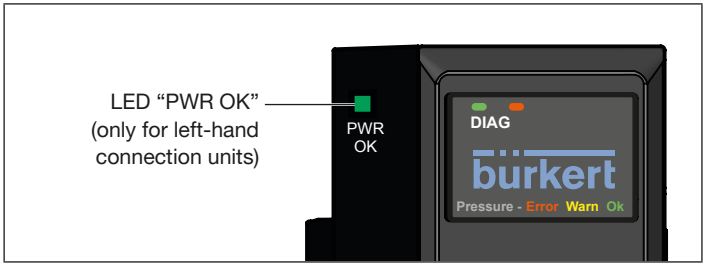

Fig. 15: LED displays of connection units

11.3 LED display of electronic base modules

The electronic base modules (part of the valve unit) feature two LED displays:

– “DIAG” LED (red / green) for module status

– “PWR” LED (green) for load voltage

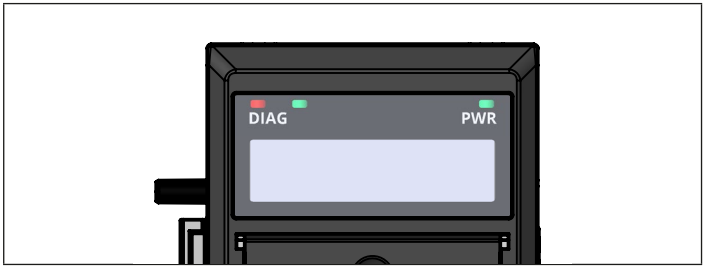

Fig. 16: LED display of a valve unit

11.4 LC display of electronic base modules

The electronic base modules (part of the valve unit) feature an LC display for displaying the device status. The switching position and possible fault states of the outputs are graphically presented on the display. Depending on the module configuration, further information can be displayed, e.g.

– Position of the actuator assigned to the output

– Measured value of the pressure sensor of a connection unit (PSU-...-PS).

Arising messages (information, warnings, faults) appear as text on the LC display. The text message is displayed alternately with the graphical display of the channel status.

Electronics modules with eight valve slots are equipped with two LC displays. In this case, numbering of the channels occurs across both displays.

Example:

Module	Left-hand display	Right-hand display
PQ8VS8	Channel 0...3	Channel 4...7
PQ16VS8	Channel 0...7	Channel 8...15

11.4.1 Pressure value display

The pressure value display is generally intended for use during start-up.

Depending on the parameterization, the value ist displayed

– alternately with the normal status display (text messages are suppressed!)

– permanently (all other displays are suppressed).

11.4.2 Priorities

Priority	Message	
1	Pressure value*	Higher priority messages suppress lower priority messages.
2	PROFIenergy	
3	Standard message (if several messages are pending, they are displayed alternately with “EVS active”, wire break, short circuit, switching cycle counter, …)	

*) At electronic base modules with eight valve slots only one LC display is required to display the pressure value.
Lower priority messages are shown on the second LC display.

11.4.3 Display contents

	Display view with four positions (from left to right channel 0–3 or channel 4–7)	
	Display view with eight positions (from left to right channel 0-7 or channel 8-15)	
	Valve channel 0 activated	
	Valve channel 0 activated Feedback: “Upper position (A) reached”	
	Valve channel 0 activated Feedback: “Lower position (B) reached”	
Pressure 1.0 bar / 14.5 psi	Pressure value display	
Message 1 / Message 2 alternating: Message 1 Feedback Err. Down 1 Message 2	*Channel 1 Feedback error lower position (B)*	Example of other possible messages: **Feedback Err. Up 1** *Channel 1 Feedback error upper position (A)*

Message 1 / Message 2 alternating: Message 1 EVS Active Message 2	*Channel 0 activated* *External Valve Shutdown active* Message 1: Process data sent by the control. These are shown on the display despite “EVS active”.	
Message 1 / Message 2 alternating: Message 1 PROFIenergy active Message 2	*Channel 0 activated* *PROFIenergy active*	
Message 1 / Message 2 alternating: Message 1 Pilot SCC Limit Ch. 0 Message 2	*Maintenance required!* *Pilot valve channel 0: Switching cycle counter limit reached*	Example of other possible messages: **Act. SCC Limit Ch. 1** *Maintenance required!* *Activated process valve channel 1: Switching cycle counter limit reached*

Message 1 / Message 2 alternating: Message 1 Wire Break Ch. 2 Message 2	*Wire break at channel 2*
Message 1 / Message 2 alternating: Message 1 Short Circuit Ch. 2 Message 2	*Short circuit at channel 2*

11.5 Diagnostics reaction

System reaction to insufficient voltage
If the supplied load voltage drops below the specified limit (see chapter “14.4 Electrical data”), diagnostics “No load voltage” will be generated. To avoid undefined switching reaction of the valves, the valves are switched off (module logic and display continue to run).

12 MAINTENANCE

WARNING

Risk of injury due to improper installation and maintenance.

- Only trained technicians may perform installation and maintenance work.
- Perform installation and maintenance work with suitable tools only.

Risk of injury due to unintentional activation and uncontrolled start-up of the system.

- Secure system against unintentional activation.
- Ensure that the system does not start up in an uncontrolled manner.

12.1 Replace valve

DANGER

Risk of injury due to pressure change.

Actuators can change their position due to pressure change which may result in injury or material damage.

- Before working on the device or system, secure the actuators against moving.

Risk of injury due to high pressure at pneumatic base modules without P shutoff.

Suddenly escaping pressure medium can quickly accelerate components (hoses, small parts ...) resulting in injuries and material damage.

- Before working on the device or system, switch off the pressure. Vent or drain lines.

Risk of injury due to pressure change at pneumatic base modules with P shutoff.

When the valve is removed, only the P channel is shut off. As a result, the existing pressure at the outputs A or B is released. An interconnected actuator is thus also depressurized, which may result in actuator movement.

- Before working on the device or system, secure the actuators against moving.

Risk of deposits or components coming loose.

When releasing a valve under pressure with P shutoff, deposits or aged components may come loose.

- Use suitable safety glasses when replacing valves.

CAUTION

Risk of malfunction of the valve block.

Single valves REV.1 and REV.2 are not compatible.

- Replace single valves REV.1 only with single valves REV.1.
- Replace single valves REV.2 only with single valves REV.2.

Pneumatic base modules with “P shutoff”:

If the pneumatic base module in question is equipped with “P shutoff” (marked at the module), a valve can also be replaced when supply pressure is present.

When the valve is removed, a relatively large amount of air is initially blown into the open for functional reasons until the required pressure difference is reached. Due to the automatic shutoff, residual leakage is reduced to a minimum and the remaining valves of the valve block can still operate.

It is not recommendable to remove several valves from the pneumatic base module at the same time.

CAUTION

Risk of injury due to hot device components.

A longer duty cycle may result in the valves becoming hot.

- Let the valves cool down before removing them or wear protective gloves.

→ Using a screwdriver, loosen the fastening screws of the valve.

→ Remove the valve with flange seal from the valve block.

→ Connect a new valve with correctly inserted flange seals to the valve slot.

→ Tighten the fastening screws in diagonal pairs while observe the permitted tightening torque (see “Fig. 17”).

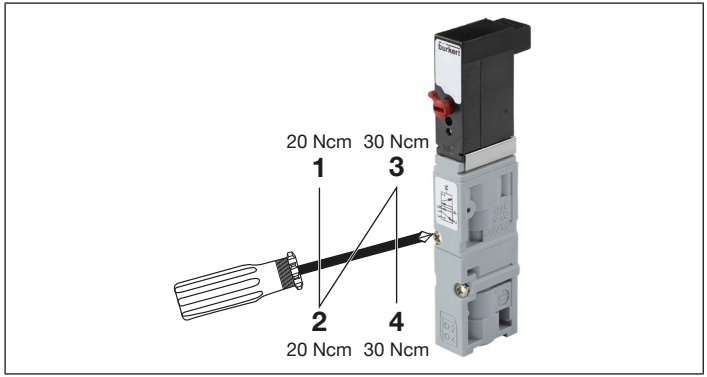

Fig. 17: Tightening the screws when replacing the valve

13 TROUBLESHOOTING

13.1 Valve reaction

Malfunction	Possible cause	Corrective action
Valves do not switch	No or insufficient load voltage	Check the electrical connection
		Ensure correct load voltage
	Manual override of the valves not in neutral position	Bring manual override into neutral position
	Inadequate or no pressure supply	Design the pressure supply with the largest possible volume (even for upstream devices such as pressure controllers, maintenance units, shut-off valves, etc.).
		Ensure a minimum operating pressure of 2.5 bar for valves without auxiliary control air
	Incorrect configuration	Configure the system according to the hardware set-up
Valves do not switch	Channel not released for use	Change adjustment of the parameters
	Device outputs substitute values	Eliminate the cause for substitute values (communication interrupted or PROFIenergy activated)
	For valves with a second connection for shutdown function: Valve connection interrupted	Check connection
	Load voltage supply at EVS connection interrupted (only modules with EVS connection)	Check wiring and activation of EVS connection
	Module-internal fuse has tripped or other module defect	Replace electronics module (please contact the Bürkert Service)

Malfunction	Possible cause	Corrective action
Valves switch with a delay or blow off at the deaeration connections	Inadequate or no pressure supply	Design the pressure supply with the largest possible volume (even for upstream devices such as pressure controllers, maintenance units, shut-off valves, etc.).
		For valves without auxiliary control air: Ensure a minimum operating pressure of 2.5 bar
	Valves are not in neutral position (de-energized) during pressure build-up	Before switching the valves, pressurize the valve block
	Deaeration of the exhaust air ducts inadequate due to too small or dirty silencers (back pressures)	Use appropriately sized silencers or expansion tanks
		Clean dirty silencers
	Impurities or foreign objects in the pilot valve	Replace valve

13.2 Module reaction

13.2.1 LED display PSU-L-...connection units

Malfunction	Possible cause	Corrective action
LED PWR OK off	No or insufficient load voltage (see chapter “14 Technical data”)	Check the electrical connection
		Ensure correct load voltage
	Module-internal fuse has tripped or other module defect	Replace connection unit (please contact the Bürkert Service)

13.2.2 LED display PQ modules and PSU-...-PS connection units

Malfunction	Possible cause	Corrective action
LED DIAG off	Backplane bus supply of ET 200SP / SP HA faulty	Check operating voltage of the interface module
		Check correct arrangement of ET 200SP / SP HA modules and valve block
LED DIAG flashes green	Module not ready for operation (not parameterized)	Carry out valid parameterization via the configuration tool
LED DIAG flashes red	Module is parameterized, module sends diagnostics	Eliminate cause for diagnostics

Malfunction	Possible cause	Corrective action
LED PWR off (only PQ modules)	No or insufficient load voltage	Check the electrical connection
		Ensure correct load voltage
	Module-internal fuse has tripped or other module defect	Replace electronics module (please contact the Bürkert Service)
	Load voltage supply at EVS connection interrupted (only modules with EVS connection)	Check wiring of EVS connection
LED Pressure lights up orange (“Warn”, only PSU-...-PS connection units)	Parameterized warning limit undercut	Increase pressure or Set a lower warning limit
	Parameterized warning limit exceeded	Reduce pressure or Set higher warning limit
LED Pressure lights up red (“Error”, only PSU-...-PS connection units)	Parameterized error limit undercut	Increase pressure or Set lower error limit
	Parameterized error limit exceeded	Reduce pressure or Set higher error limit

13.3 LC display of PQ modules

An overview of the possible display contents is provided in chapter “11.4 LC display of electronic base modules”.

Message	Possible cause	Corrective action
No message, LC display off	No or insufficient load voltage	Check the electrical connection
		Ensure correct load voltage
	Voltage interruption during firmware update	Execute firmware update again
EVS active	Load voltage supply at EVS connection interrupted (only modules with EVS connection)	Check wiring of EVS connection
	Module-internal fuse has tripped (can only occur in the event of extreme faults) or other module defect	Replace electronics module (please contact the Bürkert Service)

Message	Possible cause	Corrective action
Feedback Err Down x or Feedback Err Up x	Error at lower or upper feedback indicator to channel x	Eliminate error at feedback indicator
	Input units do not deliver QI values	Use input units with QI support (or set QI for the respective channel to 1 if the sensor does not deliver QI but QI is to be used as other sensors deliver the QI) or Configure PQ module without QI
Pilot SCC Limit Ch. x or Act. SCC Limit Ch. x	Warning limit switching cycle counter pilot valve or actuator exceeded	Replace pilot valve or maintain actuator and reset switching cycle counter or Deactivate switching cycle counter or Increase warning limit switching cycle counter
Short Circuit Ch. x	Short circuit on output channel x (valve or plug-in connection faulty)	Check plug-in connection or Replace valve

Message	Possible cause	Corrective action
Wire Break Ch. x	Wire break on output channel x (valve or plug-in connection faulty)	Check plug-in connection or Replace valve
Display permanently shows Pressure ...	Module has been configured with permanent pressure display	Change module configuration (pressure display alternating with switching positions of the outputs or deactivate pressure display)
... SCC Limit ..., Short Circuit ... or Wire Break ...	Diagnostics of the channel in question not activated during configuration	Activate diagnostics of the channel in question
But no diagnostics message on the control	Channel not activated during configuration	Activate channel

QI = Quality Information (value status).

Input units that monitor the status of a connected feedback indicator (e.g. current loop), can deliver a value status. This can be output on the display of the PQ modules.

14 TECHNICAL DATA

14.1 Operating conditions

WARNING

Malfunction if used outside.

Extreme outdoor temperatures, condensate formation or UV radiation can impair proper functioning of the system or damage the device permanently.

- Do not use the system outdoors.
- Avoid heat sources, which may cause the permissible temperature range to be exceeded.

NOTE

The permissible operating conditions for Siemens SIMATIC ET 200SP / SP HA may differ from the values listed below, e.g. depending on the installation position. Failure to observe this may result in malfunction or damage, e.g. due to heat build-up.

- Observe the operating conditions stated in the system manual of the I/O system.

SIMATIC ET 200SP

System manual:
https://support.industry.siemens.com/cs/ww/en/view/58649293
Manual collection:
https://support.industry.siemens.com/cs/ww/en/view/84133942

SIMATIC ET 200SP HA

System manual:
https://support.industry.siemens.com/cs/ww/en/view/109761547
Manuals:
https://support.industry.siemens.com/cs/ww/en/ps/24728/man

The complete system must be installed in a suitable control cabinet or in a suitable housing. The control cabinet requirements correspond to those of the Siemens distributed I/O system “SIMATIC ET 200SP” or “SIMATIC ET 200SP HA”, but at least to degree of protection IP54.

Type of condition	Permissible range
Ambient temperature	0...+55 °C Valve blocks with valve Type 0460: 0...+50 °C
Humidity	75% on average, 85% occasionally, condensation not permitted
Air pressure	80 kPa to 106 kPa (When used at heights above 2000 m mean sea level, the power supply must take place via a SELV/PELV power supply unit approved for use at this height.)
Media	Neutral gaseous media, oiled or unoiled Max. particle size 5 µm
Altitude	Restricted to max. 2000 m above sea level for UL approved versions

14.2 General technical data

Dimensions	max. 858 mm x 142 mm x 78 mm (depending on the extension, valve variants, module variants)
Weight	max. 10 kg (depending on the extension)
Material of the housing	PA, PC (valves: PA / PPS / Al)
Material of the seal	NBR
Degree of protection (according to EN 60529) verified by Bürkert, not evaluated by UL	IP20 IP65 in closed control cabinets
UL Type Rating (according to UL 50/50E)	4X in combination with AirLINE Quick (see chapter “7.3”, page 19) in closed control cabinets
Protection class (according to DIN EN 61140, VDE 0140)	3 Installation on standard rail with FE functional ground required

14.3 Pneumatic data

Control medium	Dry compressed air oiled or unoiled, neutral gases
Compressed air quality as per	ISO 8573-1: 2010, class 7.4.4*
Temperature range of the medium	–10...+50 °C (when using valve type 0460: +5...+50 °C)
Pressure range	Vacuum up to 10 bar (when using valve type 0460: 2...7 bar)
Air flow rate (QNn value, for further details see data sheet):	
Monostable valves (Type 6524 and Type 6525)	300 l/min (when using pneumatic base modules with P shutoff/HotSwap function, the flow rate is reduced: REV.1 Up to 50 % flow reduction REV.2 Approx. 20 % flow reduction)
Impulse valves (Type 0460)	200 l/min

* *To prevent the expanded compressed air freezing, its pressure dew point must be at least 10 K less than the medium temperature.*

Connections:	
Compressed air supply and exhaust air	G1/4” thread (other connections possible via adapter)
Auxiliary control air or pilot control exhaust air	M5
Working connections	Plug-in coupling D6 or D1/4”
Pressure sensor (connection units PSU-...-PS):	
Measuring range	0...10 bar (relative to environment)
Overpressure resistance	14 bar (with higher pressures, irreversible impairment of the measuring precision)
Precision	0.2 bar
Measurement rate	> 10/second
Filtering	Median filter (additional filtering of the measured value at the control is recommended in case of highly variable media consumption)

14.4 Electrical data

Connections:	
Communication	Due to the arrangement, the modules automatically contact the backplane bus of the I/O system SIMATIC ET 200SP/SP HA.
Load voltage	Due to the arrangement, the modules automatically contact the power bus of the I/O system SIMATIC ET 200SP. **Exception:** The power bus is not continued at the right-hand interface. If further function modules of the SIMATIC ET 200SP I/O system are added to the right of the valve block, (not permissible in combination with SIMATIC ET 200SP HA), the load voltage must be re-supplied for the modules.
EVS connection (optional)	Pluggable screw-type terminal, 2-pole, for wires with a cable cross-section of 0.14...1.5 mm^2 (in accordance with AWG 28-16)
Power supply voltage:	
Backplane bus	Central supply through the interface module of SIMATIC ET 200SP/SP HA
Load side (valves)	24 V ⎓ ±10% SELV/PELV, max. residual ripple 2.4 Vss[1]

Power consumption (load side)	Depending on the system extension, max. 3 A
Power consumption of valve block	Depending on the system extension, max. 80 W
Power consumption valves type 6524 and type 6525	0.8 W (Type 6524, 2x3/2-way valve: 2 x 0.8 W)
Power consumption valve type 0460	0.4 W
Fuses (load side)	All valve outputs are protected against short circuits by resettable fuses. After an occurred short circuit has been rectified, it might take a few seconds for the fuse to reset. Additionally, each electronic base module and the left-hand connection unit are equipped with a fuse (blow fuse).

1) UL approved Versions must be supplied by one of the following:
a) Limited Energy Circuit (LEC) according to UL/ IEC 61010-1
b) Limited Power Source (LPS) according to UL/ IEC 60950
c) SELV/ PELV with UL Recognized Overcurrent Protection dimensioned according to UL/ IEC 61010-1 Table 18
d) NEC Class 2 power source

14.5 Location and description of the type labels

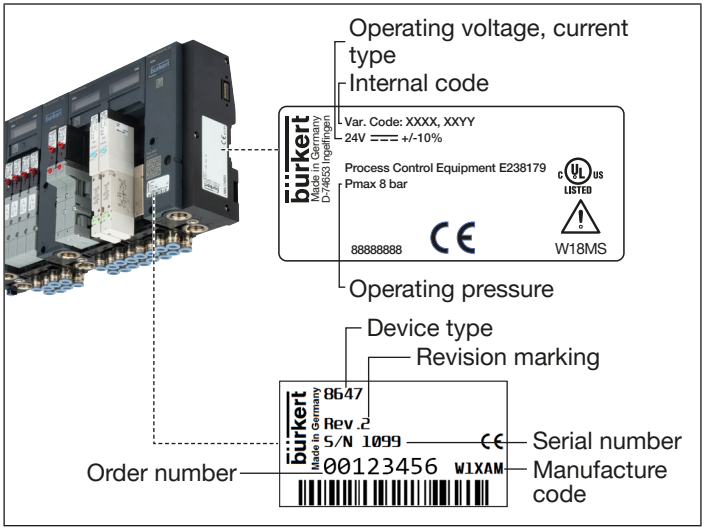

Fig. 18: Type label valve block (example)

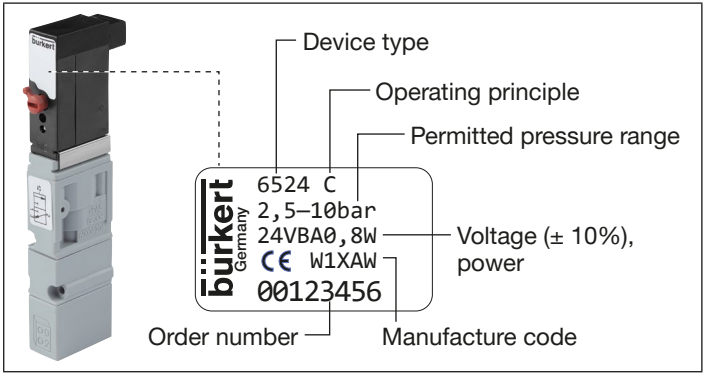

Fig. 19: Type label valve (example type 6524)

15 ENVIRONMENTALLY FRIENDLY DISPOSAL

- Follow national regulations regarding disposal and the environment.
- Collect electrical and electronic devices separately and dispose of them as special waste.

Further information country.burkert.com.

16 PACKAGING, TRANSPORT, STORAGE

CAUTION

Risk of injury due to inappropriate behavior during transportation.

- Only trained technicians may transport devices.

A heavy device can fall down and cause injury during transport or assembly work.

- Do not transport, install or remove heavy devices without the aid of a second person and using suitable auxiliary equipment.

NOTE

Transport damage.

Inadequately protected devices may be damaged during transportation.

- Protect the device from moisture and dirt in shock-resistant packaging during transportation.
- Prevent the temperature from exceeding or dropping below the permitted storage temperature.
- Protect electrical interfaces and the pneumatic connections from contamination and damage by placing protective caps on them.

Incorrect storage may damage the device.

- Store the device in a dry and dust-free location.
- Storage temperature -20...+60 °C.

bürkert
FLUID CONTROL SYSTEMS

country.burkert.com

MAN 1000331351 EN Version: EStatus: RL (released | freigegeben) printed: 01.02.2023